REACH & RoHS COMPLIANT

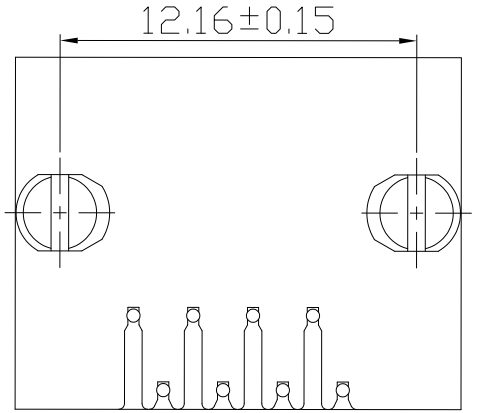

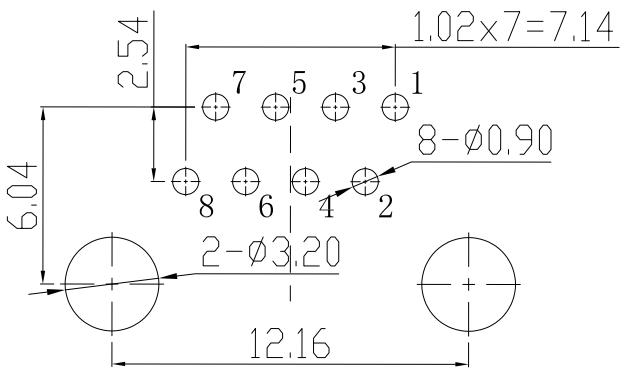

PC Board Layout
T=1.60mm

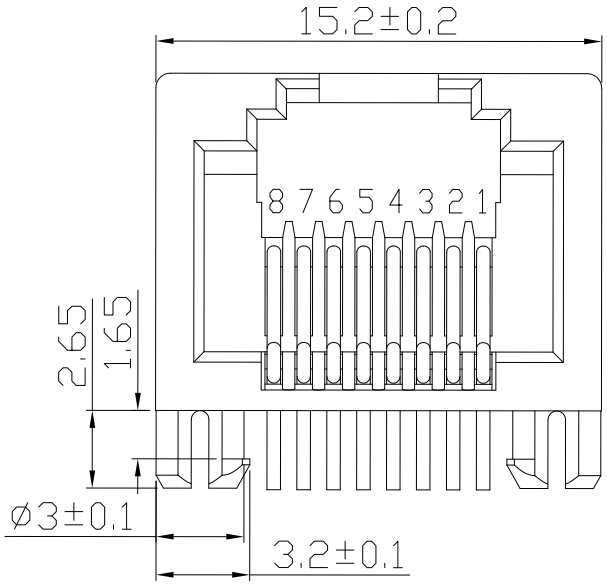

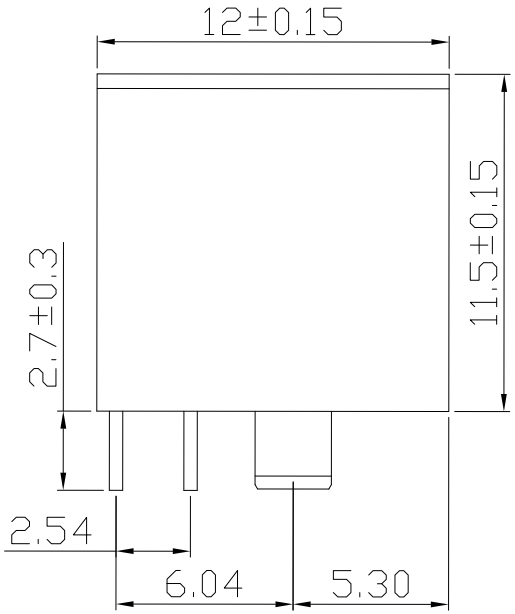

NOTES:
ELECTRICAL:
1. VOLTAGE RATING: 125V AC.
2. CURRENT RATING: 1.5A.
3. CONTACT RESISTANCE: 30 mΩ MAX.
4. INSULATION RESISTANCE: 500 MΩ MIN @ 500V DC.
5. DIELECTRIC STRENGTH: 1000V AC 50Hz or 60Hz, 1MIN.
MECHANICAL:
1. INSERT MATERIAL: UL94V-0.
2. CONTACT MATERIAL: Ø0.46mm C51000(QSn4-0.3)PHOSPHOR BRONZE GOLD PLATING OVER NICKEL.
3. MATING/UNMATING FORCE: 20N Max.
4. RETENTION STRENGTH: 50N pendant 60±5s.
5. OPERATING LIFE: 750 CYCLES MIN.
ENVIRONMENTAL:
1. STORAGE: -40℃ ～ +85℃ RELATIVE HUMIDITY<70%.
2. OPERATION: -40℃ ～ +85℃.

SYT53C1882180101B3

CONTACTS(金针根数):
8-8CONTACTS(8C)

PLASTIC(塑料):
1-PBT

COLOR(颜色):
1-BLACK(黑色);
5-YELLOE(黄色);
8-BLUE(蓝色)

GOLD PLATING(镀金厚度):
1-FU";2-1.5U";3-3U";4-6U";
5-15U";6-30U";7-50U"

PCB BOAND THICKNESS(PCB板厚度):
1-1.6mm

VOOHU 苏州沃虎电子科技有限公司 Su Zhou Voohu Electronic Tech.Co.Ltd	TITLE: 5324mini 1X1 8P8C B型(T=1.60)三台阶 蓝色	SIZE A4	UNITS MM[INCH]	GENERAL TOLERANCES UNLESS SPECIFIED		APPROVED BY: Geoffrey.Song
	PART NO.: SYT53C1882180101B3	SCALE 1:1	REV A0	x±0.35	x°±3.0°	CHECKED BY: Elvis.Song
				.x±0.30	.x°±2.0°	
TEL: +86 400 1048 018	WEB: WWW.WOHU-TEK.COM	REMARK:	SHEET 1/1	.xx±0.25	.xx°±1.5°	DESIGNED BY: Sunny.Xu
				.xxx±0.10	.xxx°±1.0°	