REACH & RoHS COMPLIANT

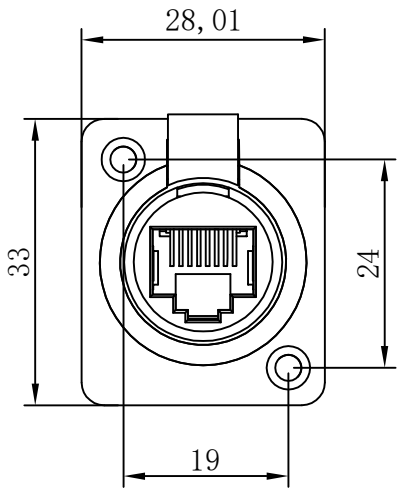

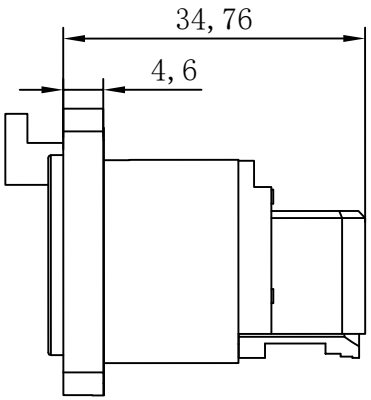

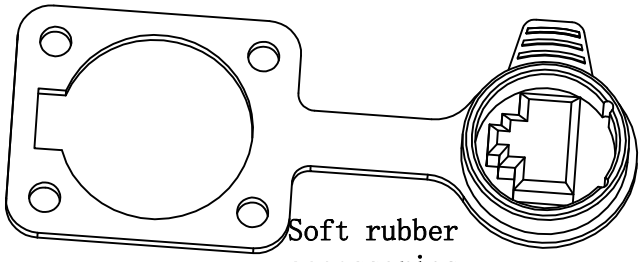

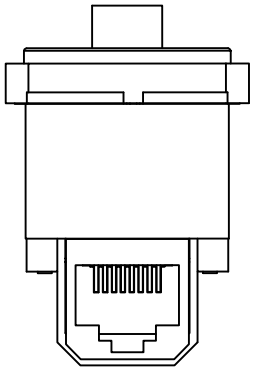

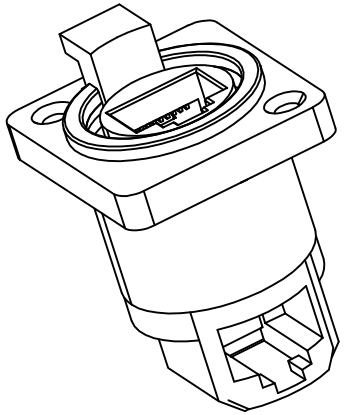

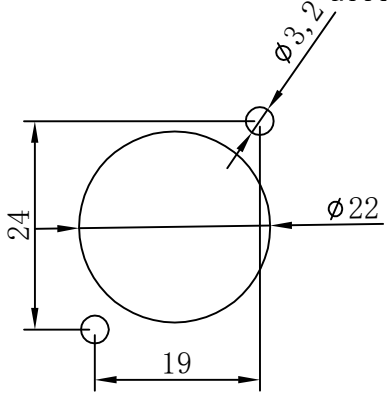

Frontplattenausschnitt
(Ruecksei te)
Panel cut out (rear side)

Electrical
Contact Resistance: <10mΩ
Insulation strength: 1 kvdc
Frequency range: 1-100 MHz
Insulation resistance: >0.5 GΩ
Single contact rated current: 1.5A
rated voltage: <50 V
Transmission performance: Class D
Meet the criteria: TIA/EIA 586B IEC11801

Mechanical
Insertion force: ≤ 20 N
Pull out the force: ≤ 20 N
Service life: > 1000 pluggings
Panel thickness: Max. 3mm 0.12
Wiring: vertical PCB installation
Locking device: Latch Lock
Installation direction: rear installation
Base Shape: A
Mounting: A-Screw

Material
Plating of contacts: 0.2 um Au over Ni plating
Contact: bronze (Cusn8)
Inner core: PBTP 15% GR
The shell: PBTP 15% GR

Environmental
Flammability: UL 94 V-0
Solderability: comply with IEC 68-2-20
Operating temperature: -30℃ to 80℃

序号	名　称	材　料	数　量	镀层/颜色	备　注
9	直通内芯	PHOSPHOR BRONZE（0.3*64）	1	LCP/未镀	
8	按柄弹片	锰钢	1	NI	
7	按柄	不锈钢	1	NI	
6	软胶防尘盖	硅胶（50%）	1	/	
5	软胶内垫	硅胶（50%）	1	BLACK	
4	排　针	PHOSPHOR BRONZE	8	1U″	
3	90° 后盖	PA66	1	BLACK	
2	金属面板	锌合金	1	NI	
1	主体基座	PA66	1	BLACK	

VOOHU 苏州沃虎电子科技有限公司
Su Zhou Voohu Electronic Tech.Co.Ltd
TEL: +86 400 1048 018
WEB: WWW.WOHU-TEK.COM

TITLE:	SIZE	UNITS	GENERAL TOLERANCES UNLESS SPECIFIED		APPROVED BY:
WH-KNZ-63 90°	A4	MM[INCH]			Geoffrey.Song
PART NO.: WHKNZ6390	SACLE 1:1	REV A0	x±0.35 / .x±0.30	x°±3.0° / .x°±2.0°	CHECKED BY: Elvis.Song
REMARK:	SHEET 1/1		.xx±0.25 / .xxx±0.10	.xx°±1.5° / .xxx°±1.0°	DESIGND BY: Sunny.Xu