REACH & RoHS COMPLIANT

REV.	ECN NO.	CONTENT	DATE	ENGINEER
A0				

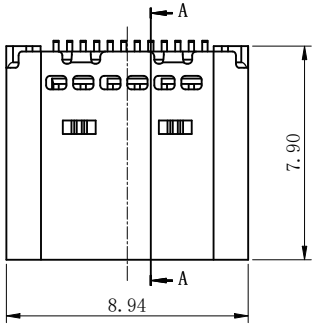

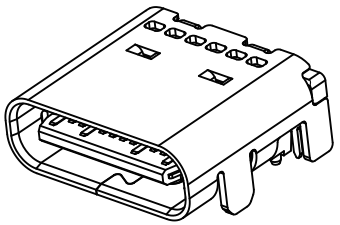

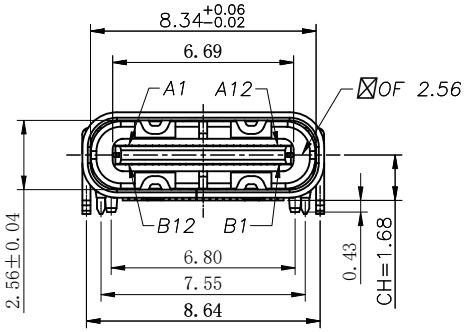

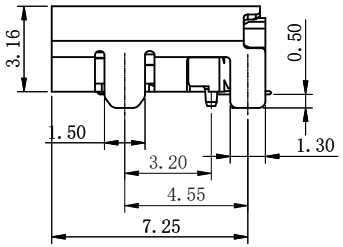

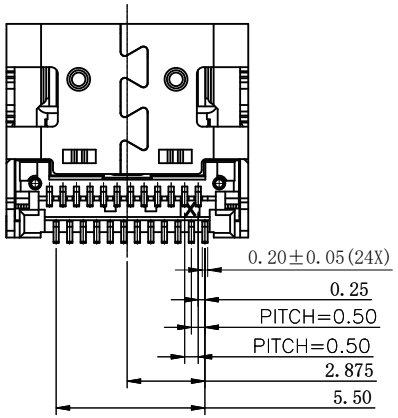

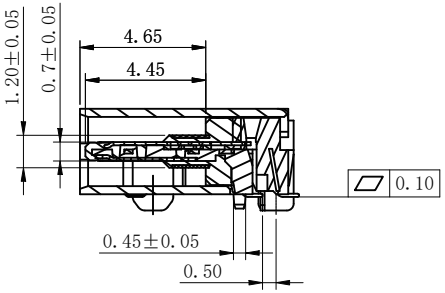

SECTION:A–A

NOTE:

1. MATERIAL SPECIFICATION:
   1. HOUSING:HIGH TEMPERATURE RESISTANT PLASTIC,UL94 V-0.
   2. CONTACTS:COPPER ALLOY
   3. MID PLATE: STAINLESS STEEL
   4. FRONT SHELL: STAINLESS STEEL
   5. EMI PLATE: STAINLESS STEEL
2. PLATING SPECIFICATION:
   2-1. CONTACTS:
   Ni 50u″ MIN. UNDER PLATED OVER ALL.
   Au PLATED ON THE FUNCTIONAL AREA OF CONTACT.
   (GOLD FLASH PLATING ON CONTACT AREA)
   PLATING SPECIFICATIONS OF THE SOLDER AREA FOLLOW THE P/N
   2-2. FRONT SHELL:
   Ni 30u″ MIN. UNDER PLATED OVER ALL.
   2-3. MID PLATE:
   Ni 30u″ MIN. UNDER PLATED OVER ALL.
   Sn 80u″MIN. PLATED OVER ALL
   2-4. EMI PLATE:
   CLEAR ONLY
3. MECHANICAL PERFORMANCE,
   3-1. INSERTION FORCE: 0.5~2.0kgf.
   3-2. REMOVAL FORCE: 0.8kgf~2.0kgf.
   3-3. DURABILITY: 10000 CYCLES.
4. ELECTRICAL PERFORMANCE,
   4-1. CURRENT RATING:5.0A
   VOLTAGE RATING:5.0V
   4-2. LLCR:
   VBUS & GND PINS AND OTHER PINS: 40mΩ/PIN MAX.
   LLCR MAX. CHANGE OF ALL PINS: 10mΩ.
   4-3. INSULATION RESISTANCE: 100MΩ MIN
   4-4. DIELECTRIC WITHSTAND VOLTAGE,AC 100V FOR 1 MINUTE.
5. ENVIRONMENTAL PERFORMANCE:
   OPERATING TEMPERATURE: -25° C~+85° C.
6. IR REFLOW:
   THE PEAK TEMPERATURE ON THE BOARD SHALL
   BE MAINTAINED FOR 10 SECONDS AT 260° C.
7. TID NUMBER:2780

VOOHU 苏州沃虎电子科技有限公司
Su Zhou Voohu Electronic Tech.Co.Ltd
TEL: +86 400 1048 018
WEB: WWW.WOHU-TEK.COM

TITLE: TYPE-C 24P 母座 L=7.90 CH=1.68 板上四脚插 带柱 脚长0.5 端子双排SMT	SIZE A4	UNITS MM[INCH]	GENERAL TOLERANCES UNLESS SPECIFIED		APPROVED BY: Geoffrey.Song
PART NO.: WHUC.01.54-12-0003	SCALE 1:1	REV A0	x±0.35	x°±3.0°	CHECKED BY: Elvis.Song
REMARK:	SHEET 1/3		.x±0.30	.x°±2.0°	DESIGNED BY: Sunny.Xu
			.xx±0.25	.xx°±1.5°	
			.xxx±0.10	.xxx°±1.0°	

REACH & RoHS COMPLIANT

REV.	ECN NO.	CONTENT	DATE	ENGINEER
A0				

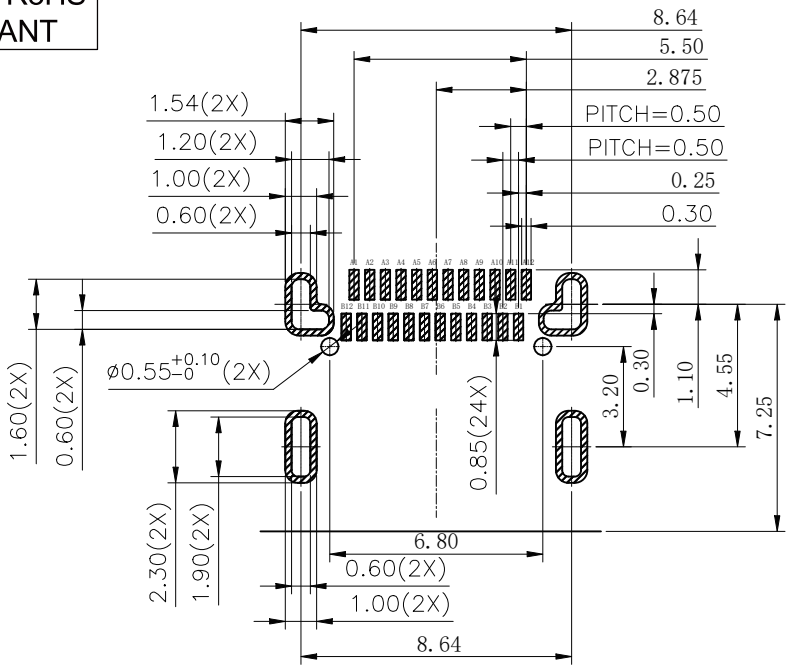

RECOMMENDED PCB LAYOUT(TOP VIEW)

THICKNESS 0.60MM;DEFAULT TOLERANCE:±0.05

USB TYPE-C PIN ASSIGNMENTS

PIN NUMBER	SIGNAL NAME	PIN NUMBER	SIGNAL NAME
A1	GND	B12	GND
A2	TXp1	B11	RXp1
A3	TXn1	B10	RXn1
A4	VBUS	B9	VBUS
A5	CC1	B8	SBU2
A6	Dp1	B7	Dn2
A7	Dn1	B6	Dp2
A8	SBU1	B5	CC2
A9	VBUS	B4	VBUS
A10	RXn2	B3	TXn2
A11	RXp2	B2	TXp2
A12	GND	B1	GND

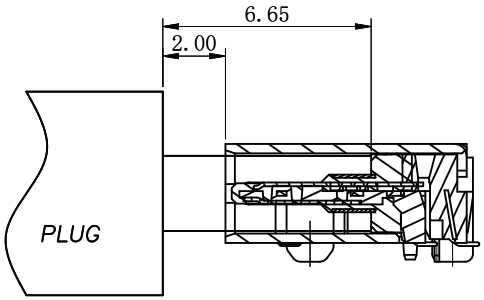

AFTER MATING

苏州沃虎电子科技有限公司
Su Zhou Voohu Electronic Tech.Co.Ltd

TEL: +86 400 1048 018

WEB: WWW.WOHU-TEK.COM

TITLE: TYPE-C 24P 母座 L=7.90 CH=1.68 板上四脚插 带柱 脚长0.5 端子双排SMT	SIZE A4	UNITS MM[INCH]	GENERAL TOLERANCES UNLESS SPECIFIED		APPROVED BY: Geoffrey.Song
PART NO.: WHUC.01.54-12-0003	SCALE 1:1	REV A0	x±0.35	x°±3.0°	CHECKED BY: Elvis.Song
			.x±0.30	.x°±2.0°	
REMARK:	SHEET 2/3		.xx±0.25	.xx°±1.5°	DESIGNED BY: Sunny.Xu
			.xxx±0.10	.xxx°±1.0°	

REACH & RoHS COMPLIANT

REV.	ECN NO.	CONTENT	DATE	ENGINEER
A0				

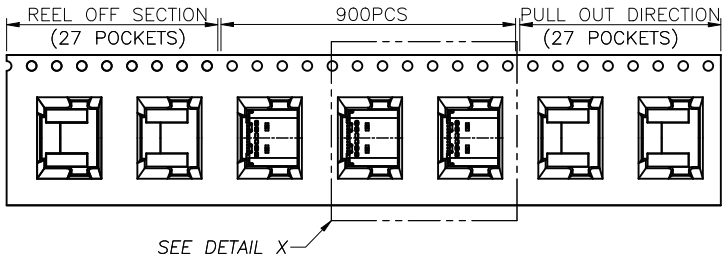

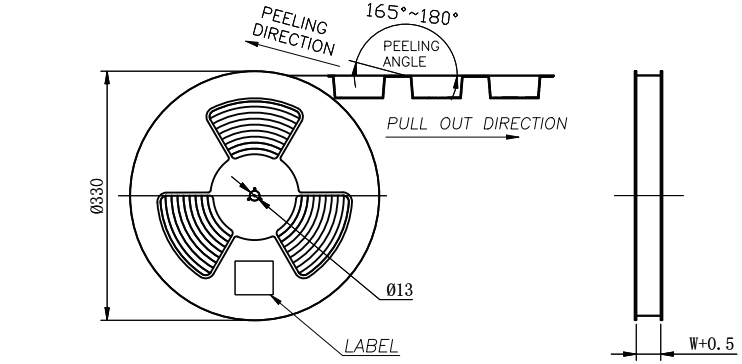

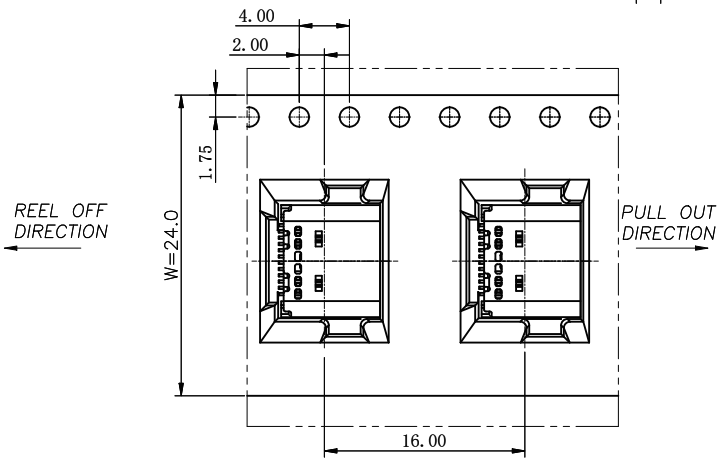

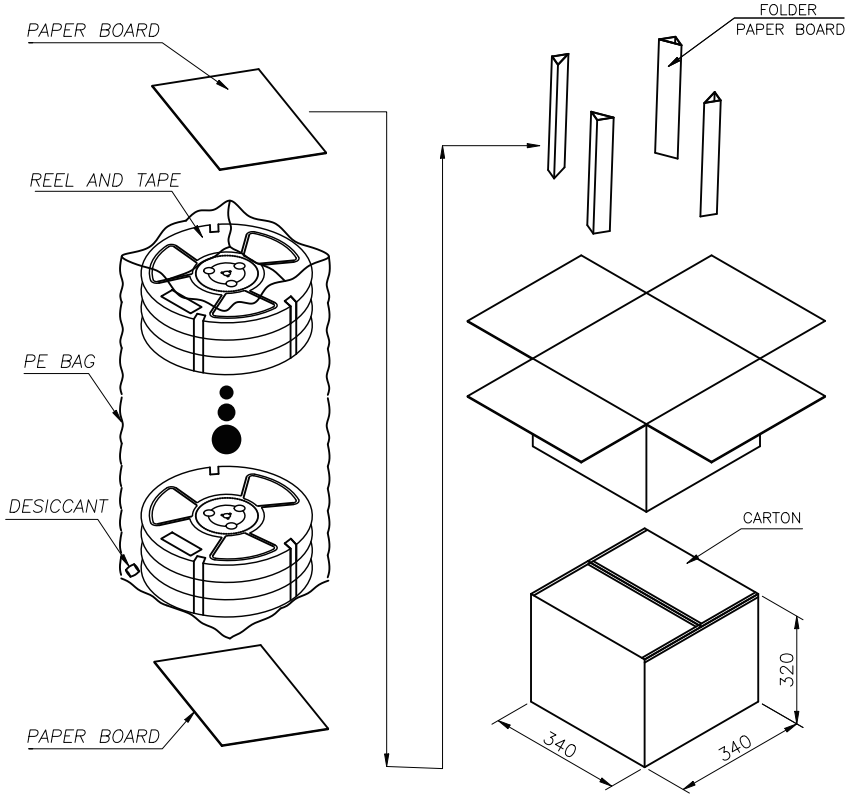

苏州沃虎电子科技有限公司
Su Zhou Voohu Electronic Tech.Co.Ltd

TEL: +86 400 1048 018
WEB: WWW.WOHU-TEK.COM

TITLE: TYPE-C 24P 母座 L=7.90 CH=1.68 板上四脚插 带柱 脚长0.5 端子双排SMT	SIZE A4	UNITS MM[INCH]	GENERAL TOLERANCES UNLESS SPECIFIED	APPROVED BY: Geoffrey.Song
PART NO.: WHUC.01.54-12-0003	SCALE 1:1	REV A0	x±0.35 / x°±3.0°; .x±0.30 / .x°±2.0°	CHECKED BY: Elvis.Song
REMARK:	SHEET 3/3		.xx±0.25 / .xx°±1.5°; .xxx±0.10 / .xxx°±1.0°	DESIGNED BY: Sunny.Xu